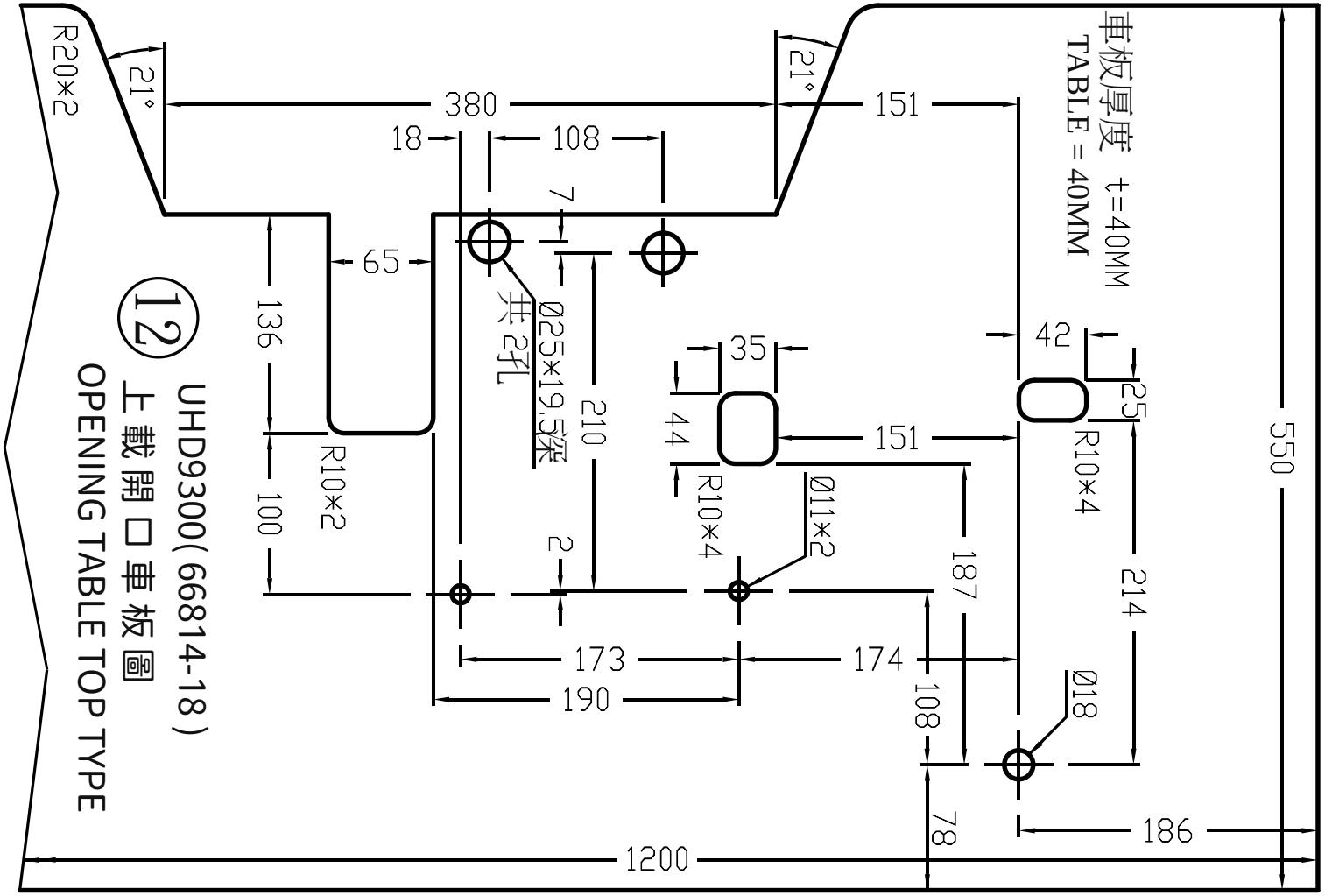66814-18	上載式 Non Submerged	開口 Open-Cut	適用機型 Applicable Models UHD9300/TR037